CTA “L” Ridership Statistics

Carlos Guerrero, Abeer Ismail, Aaryan Mariselvam

Contents

1 Overview

2 Data Requirements

- **2.1 Stations**
- **2.2 Ridership**
- **2.3 Lines**

3 Application Requirements

- **3.1 Searching for Stations**
  - **3.1.1 Viewing Station Data**
- **3.2 Viewing Stops Along a Line**
- **3.3 Ridership Aggregates**
- **3.4 Top Stations**
- **3.5 Station Maps**

4 ER Diagram

5 T-SQL Table Queries

Youtube Demonstration: https://youtu.be/k0sKbwZAI38

Github Repo: https://github.com/maisma2/CTA-SQL-Lookup

1 Overview

The goal of this project is to create an application that shows ridership analytics of Chicago's "L" train system. The end user can search through various metrics/datapoints such as total ridership, stations of importance [1], stops along a train line, and more. Using all the combined data, leads us to an importance score, which shows whether a station/stop is the most important to the neighborhood and its community.

2 Data Requirements

2.1 Stations

- A station, the physical platform where trains arrive, has 7 corresponding attributes within the database, the stop ID, the station ID, the stop name, direction, ADA compliance, latitude, and longitude.
- The table's primary key is the stop ID, each stop ID corresponds to a single station ID, whereas a station ID is linked to multiple stops
- The station name is on a separate table where a station ID has a corresponding name attribute column

2.2 Ridership

- Ridership within the database is the aggregate number of entries a particular station had on a specific day. Ridership has 5 corresponding attributes, the station ID, the station name, the date, the day of the week (weekday, weekend, holiday), and the total number of riders that day.
- The table's primary key is a composite value of the station ID and date

2.3 Lines

- A line is the route of stops a train will take. Lines are identified by their color (9 in total) the table which records the stops a line has links a stop ID to a line color.
- The table's primary key is a composite value of the stop ID and line color; this is to account for the Purple Line Express where one stop ID is linked to two line colors

1) Importance is how important/busy a station is relative to ridership and number of lines serviced,
$importance = log_{10}(\text{Total Rides} + 1) + \text{number of lines}$

3 Application Requirements

The program centers around a stateless design, the end user is prompted to either search for a station by name or is given a list of all stations and view the top 10 most important stations or view the stops and subsequently the stations on a particular train line.

3.1 Searching Stations

- Utilizing SQL wildcards, searching for a station can be done in partials (ie. Forest will bring up Forest Park). The returned list includes
    - The station name
    - ADA accessibility

3.1.1 Viewing Station Data

- Aside from searching, users can also view a list of every station in the CTA "L" transit system, along with the top 10 most important stations in the network. Clicking on any station brings up
    - The station name and importance value
    - Lines serviced at that station
    - Average ridership on a weekday, weekend, and holiday
    - Recent ridership for the past 30 days
    - A map pinpointing the latitude/longitude of that station

3.2 Viewing Stops Along a Line

- Instead of searching through the name of a station, users can also retrieve a list of all stops along the route of a particular train line using a filter on the search bar, clicking on the stop will then retrieve the data of the station that houses that stop.

3.3 Ridership Aggregates

- This is the total estimated ridership (from 01-01-2001 to 9-30-2025) by line color, aggregated across all stations served by that line. Can be found on the website index.

3.4 Top Stations

- Produces the list of Stations with the highest importance score in the city. Meaning they provide the most functionality and are the highest used stops.

3.5 System Map

- Provides an interactive station wide map, providing the locations of all stations and places markers, which are colored to match the line with the highest ridership

4 ER Diagram

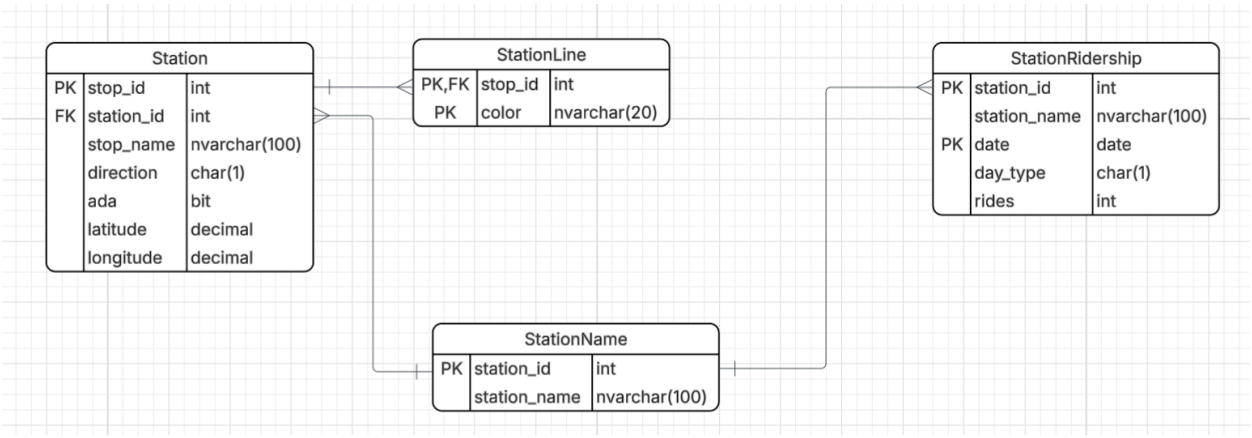
Station
PK stop_id int
FK station_id int
stop_name nvarchar(100)
direction char(1)
ada bit
latitude decimal
longitude decimal
StationLine
PK,FK stop_id int
PK color nvarchar(20)
StationRidership
PK station_id int
station_name nvarchar(100)
PK date date
day_type char(1)
rides int
StationName
PK station_id int
station_name nvarchar(100)

5 T-SQL Table Queries

```
create table StationName
(
   station_id   int           not null
       primary key,
   station_name nvarchar(100) not null
)
go

create table Station
(
   stop_id    int           not null
       primary key,
   station_id int           not null
       constraint Station_StationName_station_id_fk
           references StationName,
   stop_name  nvarchar(100) not null,
   direction  char          not null,
   ada        bit           not null,
   latitude   decimal(9, 6) not null,
   longitude  decimal(9, 6) not null
)
go

create table StationLine
(
   stop_id int          not null
       constraint StationLine_Station_stop_id_fk
           references Station,
   color   nvarchar(20) not null,
   primary key (stop_id, color)
)
go
```

```sql
create table StationRidership
(
   station_id   int           not null,
   station_name nvarchar(100) not null,
   date         date          not null,
   day_type     char          not null,
   rides        int           not null,
   primary key (station_id, date)
)
go
```